REVISION HISTORY					
DATE	REV.	PREVIOUS PART NO.	DESCRIPTION	ZONE	BY

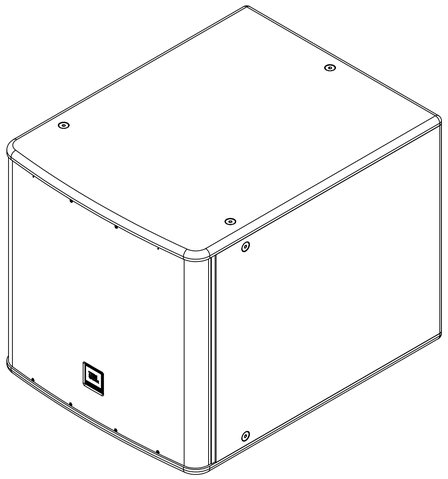

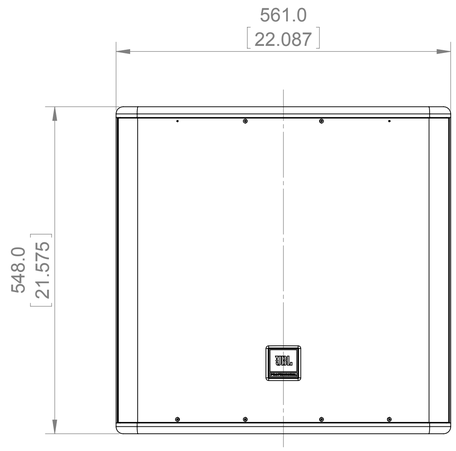

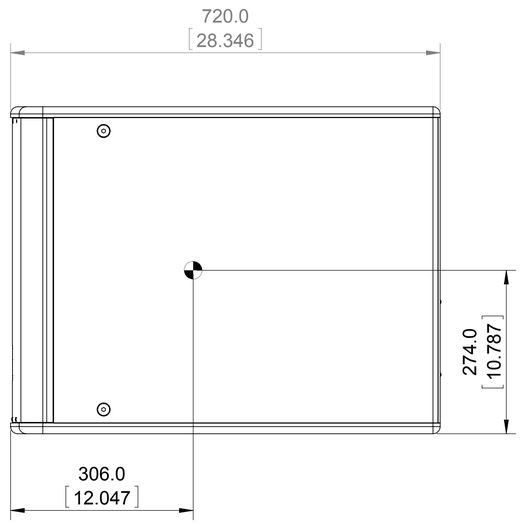

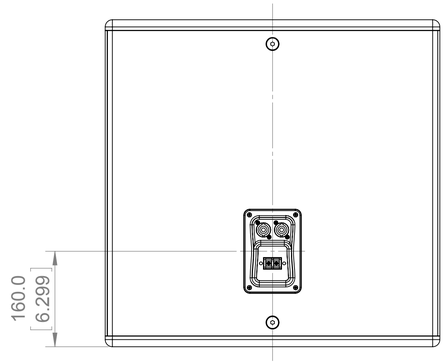

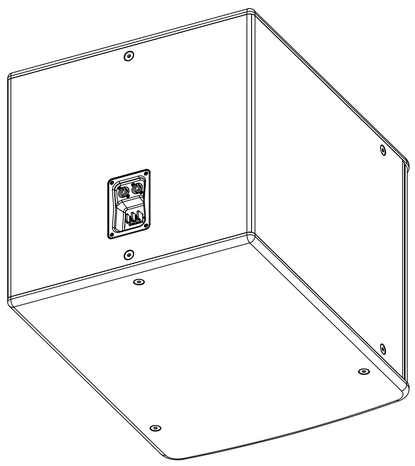

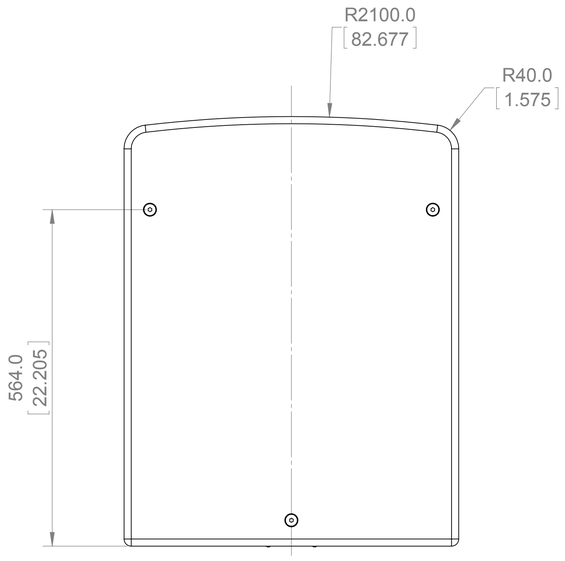

1. Components: Woofer 1×18" ;
2. Input connector: Dual Neutrik NL4MP, covered barrier strip terminals.
3. Grill: SPCC T=1.5mm,black powder coated,with black foam attached.
4. Cabinet Material: 18mm Poplar plywood.
5. Cabinet Finish: Water base rough grain texture painting,Matte black.
6. Weight: 32.3kg (71.21 lbs)
7. Suspension points:
   3 EA M10 thread pattern -- Top/btm panel
   2 EA M10 thread pattern -- Rear panel
   2 EA M10 thread pattern -- Side panel

PROPRIETARY AND CONFIDENTIAL
PROPERTY OF HARMAN. DO NOT DISCLOSE, REPRODUCE, OR PUBLISH WITHOUT WRITTEN HARMAN APPROVAL.

ROHS
RESTRICTION OF HAZARDOUS SUBSTANCES
ALL MATERIALS USED IN THIS PART MUST BE ROHS COMPLIANT.
SUPPLIER SHALL PROVIDE A CERTIFICATE OF ROHS COMPLIANCE WITH THE FIRST ARTICLE.

TOLERANCES UNLESS OTHERWISE SPECIFIED
.X ± 0.30 mm
.X. ± 0.50 mm
ANGULAR ± 0°30'
ALL DIMENSIONS ARE IN MILIMETERS
ALL DIMENSIONS APPLY AFTER FINISH

DIMENSIONS SHOWN ARE FOR REFERENCE AND INSPECTION ONLY. REFER TO CAD MODEL PROVIDED WITH THIS DRAWING FOR OVERALL DEFINITION OF PART GEOMETRY.

THIRD ANGLE PROJECTION

DRAWN BY	Gavin	DATE	09/15/2014
DESIGNED BY	?	DATE	
ENGINEER	?		

HARMAN

6&7F, Tower B
Kingdee Software Park,
No.2 12th Road South
High-tech Industrial Park
Shenzhen 518057, CN

TITLE: SPKSYS,ASY,AC118S

NO.	REV
AC118S	A

SIZE	SCALE		SHEET	OF
D	1:10	DO NOT SCALE DRAWING	2	2